REVISIONS				
REV.	DESCRIPTION	ECO	DATE	CHANGED BY

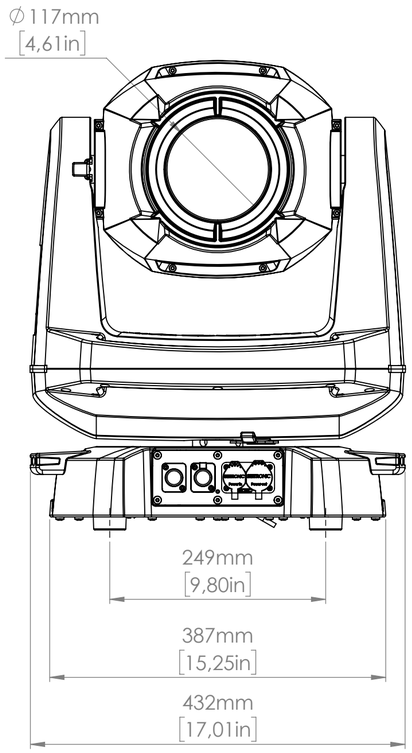

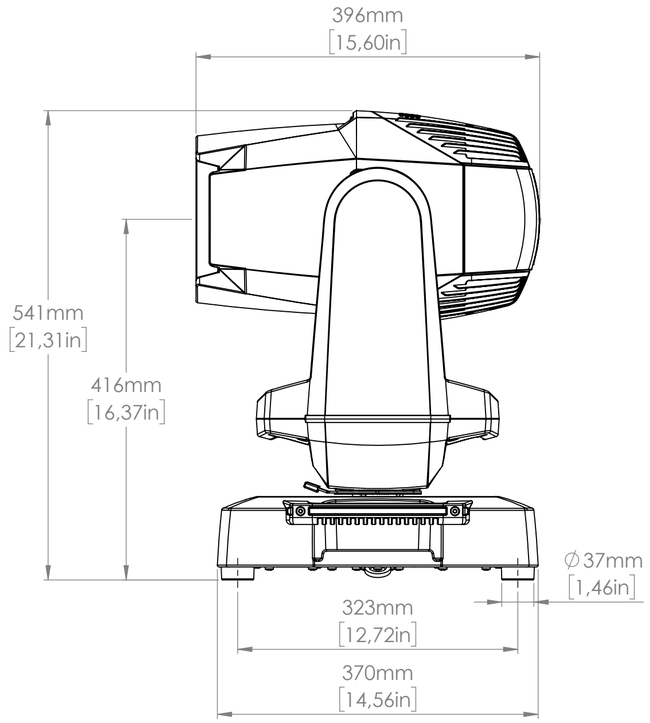

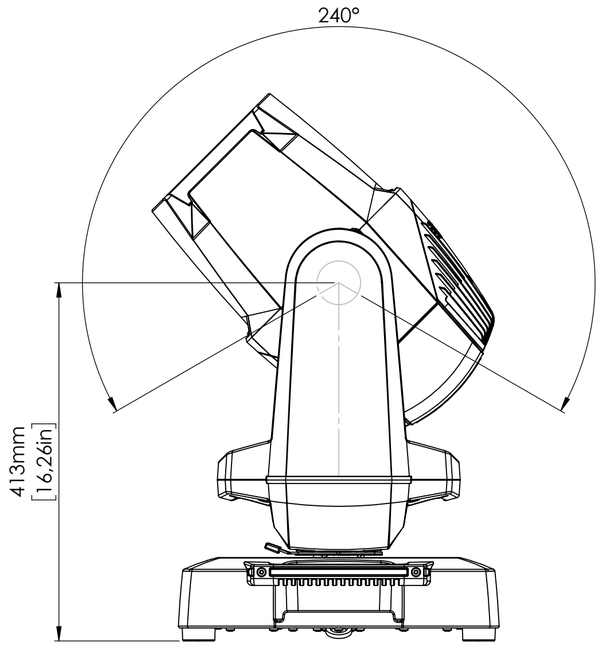

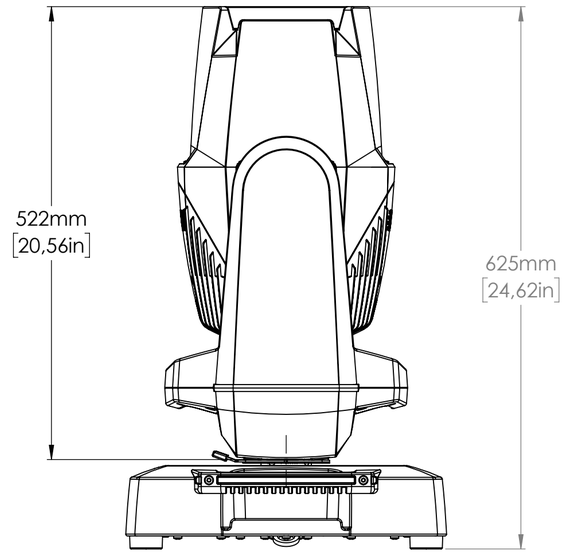

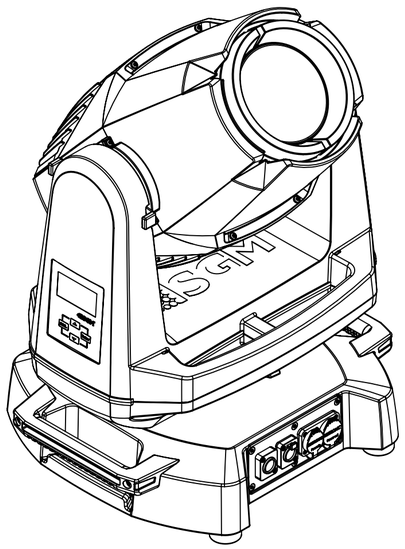

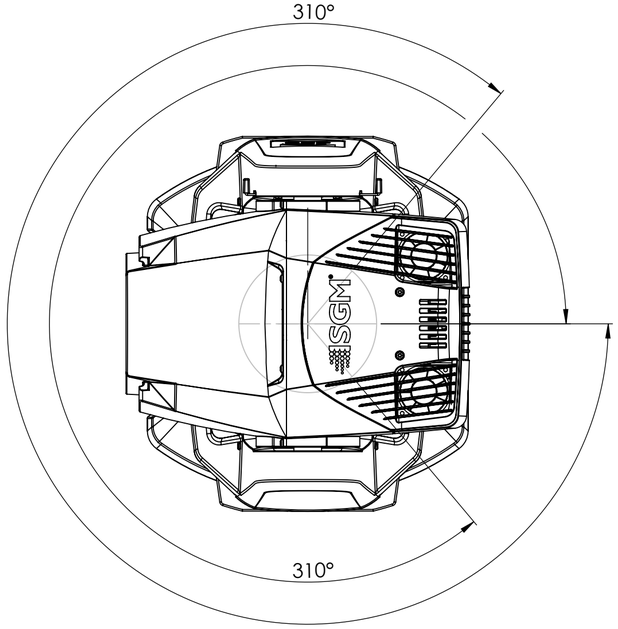

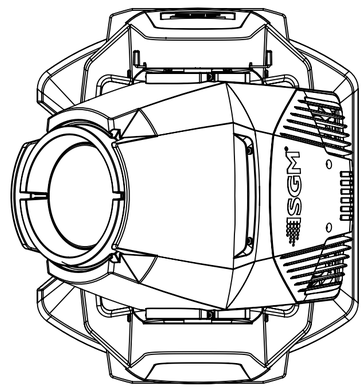

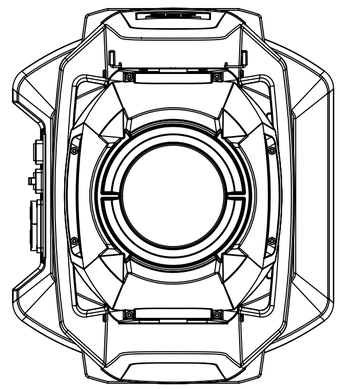

Tolerances according to ISO 2768-1: M	
Nominal size	Permissable deviations
0,5 up to 3	±0,1
over 3 up to 6	±0,1
over 6 up to 30	±0,2
over 30 up to 120	±0,3
over 120 up to 400	±0,5
over 400 up to 1000	±0,8
over 1000 up to 2000	±1,2

DEBUR AND BREAK SHARP EDGES

DO NOT SCALE DRAWING

All Dimensions are in mm

	NAME	DATE
Created By		10. januar 2018 11:52:50
Last saved By	bar	12. oktober 2021 11:32:13

FINISH:

MATERIAL:
Material <not specified>

WEIGHT: 38726.65

SGM®

PAPER SIZE: A2

TITLE:
G-7 Spot, Std, BL

DWG NO.
60102505-E

SCALE:1:5

SHEET 1 OF 1